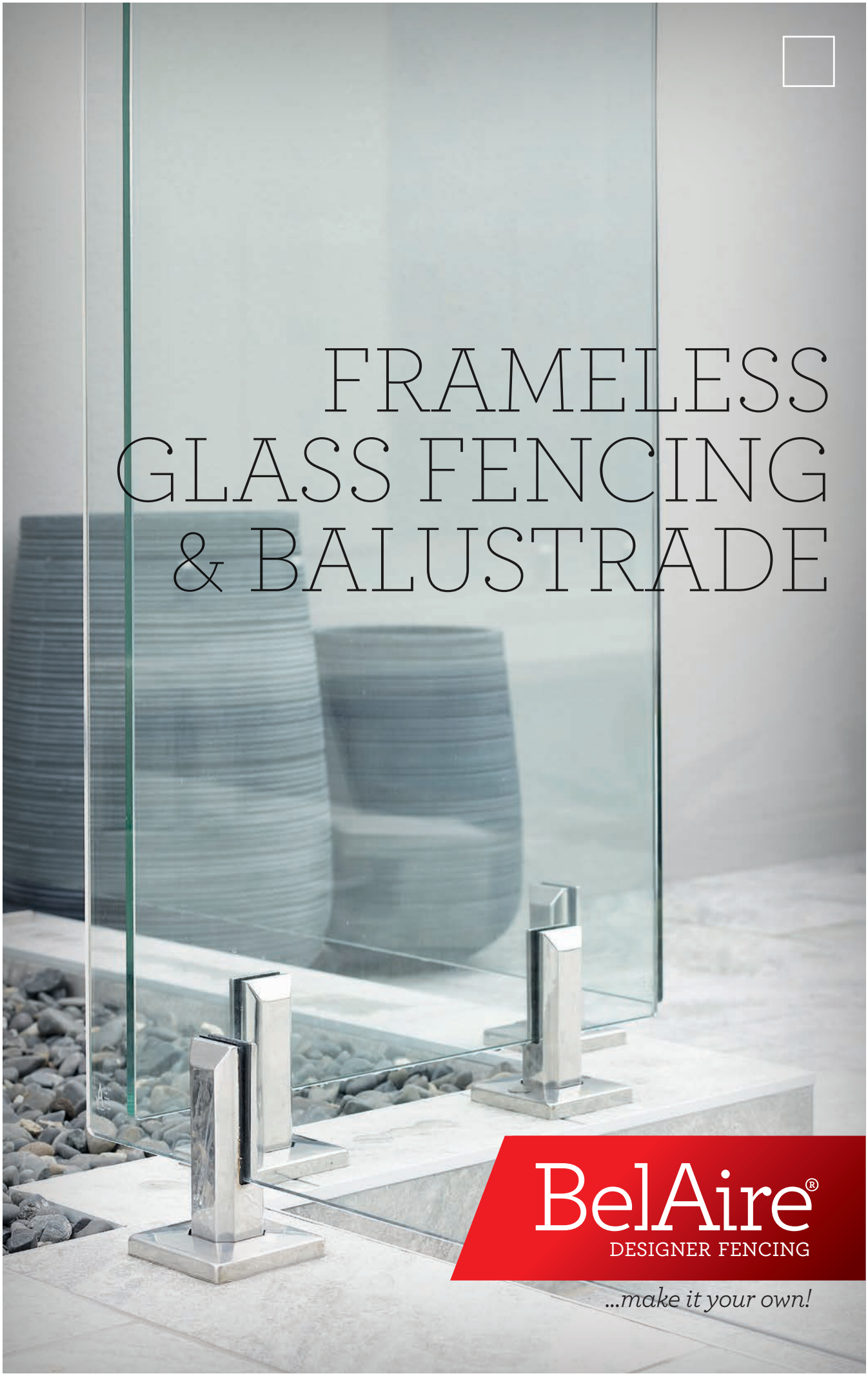

FRAMELESS GLASS FENCING & BALUSTRADE

BelAire®
DESIGNER FENCING

...make it your own!

BelAire®
DESIGNER FENCING

...make it your own!

AS/NZS2208 Grade A TF ID 7777

FRAMELESS GLASS FENCING & BALUSTRADE

CLEAR

BelAire frameless glass pool fencing and balustrade is invisibly superior – it's crystal clear without the green tint you get with inferior brands. Enjoy lounging by the pool on on the deck with nothing to interrupt your view. Relax behind a strong, effective wind barrier and take in all-day sunshine as BelAire casts no shadows!

SAFE

With uninterrupted views, you'll always be able to keep your eye on the kids as they play in the pool. And with 12mm thick toughened safety glass with polished bevel edges, you'll know they'll also be safe and sound outside the fence. Our gates also use a self-closing hinge with a side pull latch, so you'll know they'll never be left open by mistake.

VERSATILE

BelAire can be installed on a variety of surfaces, including tiled areas, pavers, timber decks, concrete and across landscaped areas – making it a truly versatile option for pools, water features, patios, decking, and natural settings. The modern architectural look can also be customised from our selection of elegant, corrosion-resistant, mini posts, latches and hinges to match your property.

EASY

It's so simple to clean and maintain – with no frames to collect water and dust, and with corrosion-resistant hardware throughout, it will remain sparkling with minimum effort.

It's also simple to install – most home owners would find the system quick and easy to install using basic tools that they would have in their shed. If you'd rather get someone else to install it, we have a list of preferred installers throughout NZ. Call us on 0800 235 2473 and we will put you in touch with an installer in your area.

COMPLIANT

Our toughened safety glass that comes with the PAS Mark AS/NZS2208 marking on every panel. Should you require a PS1 to submit with you pool or building permit request, you can download one from our website: www.belairefencing.co.nz

You will require a handrail on your balustrade or pool fencing if there is a drop of more than 1m on one side. Scenik slimline handrails are manufactured from polished stainless steel to create a sophisticated finish that does not diminish the appearance of your glass fencing.
They are also very strong and fully compliant to NZS4223:2016.

EXAMPLE CONFIGURATION

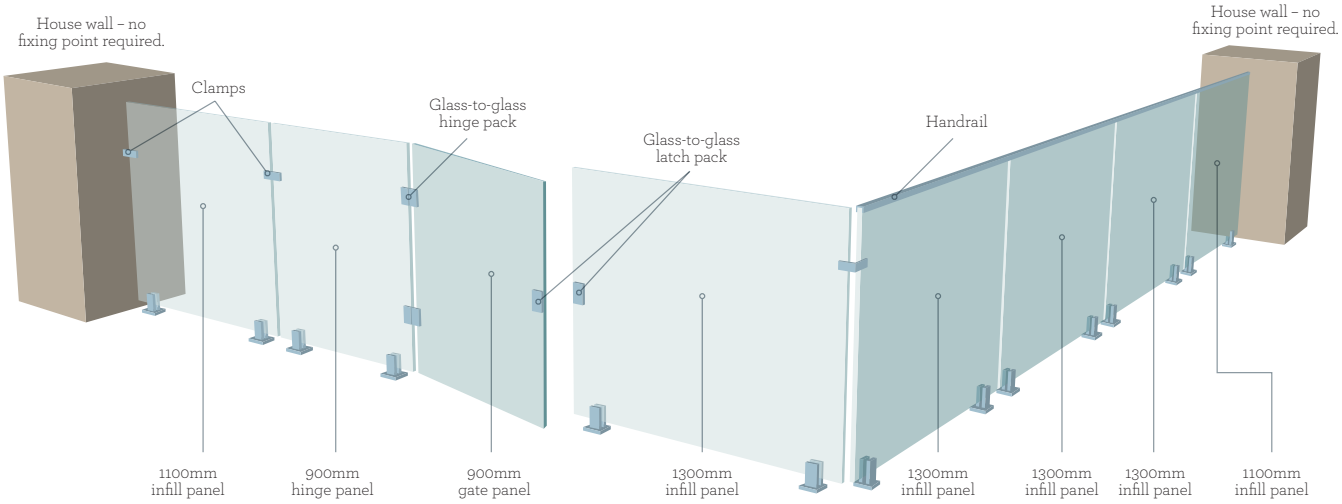

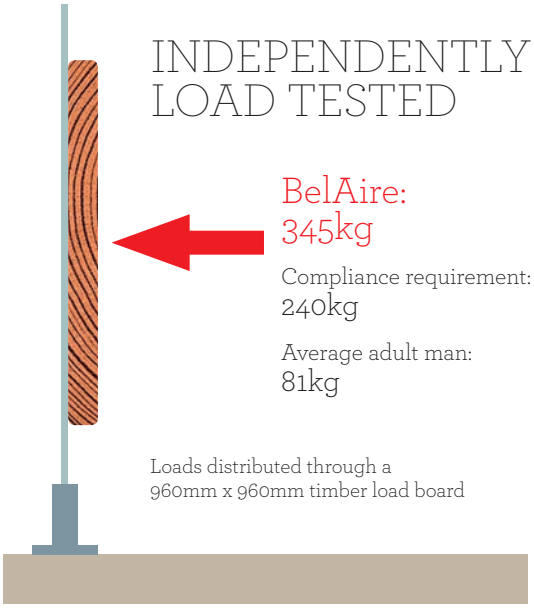

INDEPENDENTLY LOAD TESTED

BelAire:
345kg

Compliance requirement:
240kg

Average adult man:
81kg

Loads distributed through a
960mm x 960mm timber load board

GENERAL FEATURES

- 12mm toughened safety glass
- New Zealand standards compliant
- 20 year warranty
- DIY instructions included

Compliant with:
AS/NZS2208: 1996
New Zealand standards for safety glass manufacturing

NZS 8500
Safety barriers and fences around swimming pools, spas and hot tubs

NZS 4223: 2016
Approved Balistrade Handrail

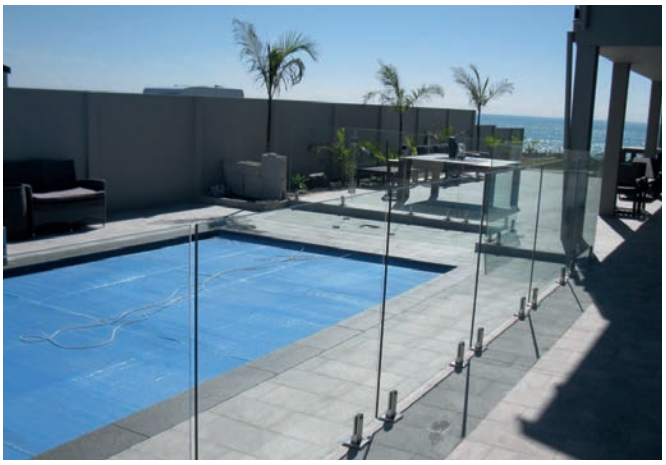

BelAire®
DESIGNER FENCING

FRAMELESS GATE LAYOUTS

GLASS-TO-GLASS HINGES & GLASS-TO-GLASS LATCH

- Hinge panel available widths: 500/900/1300/1450/1600mm
- Use a friction latch. Any size panel can be used as a latch panel

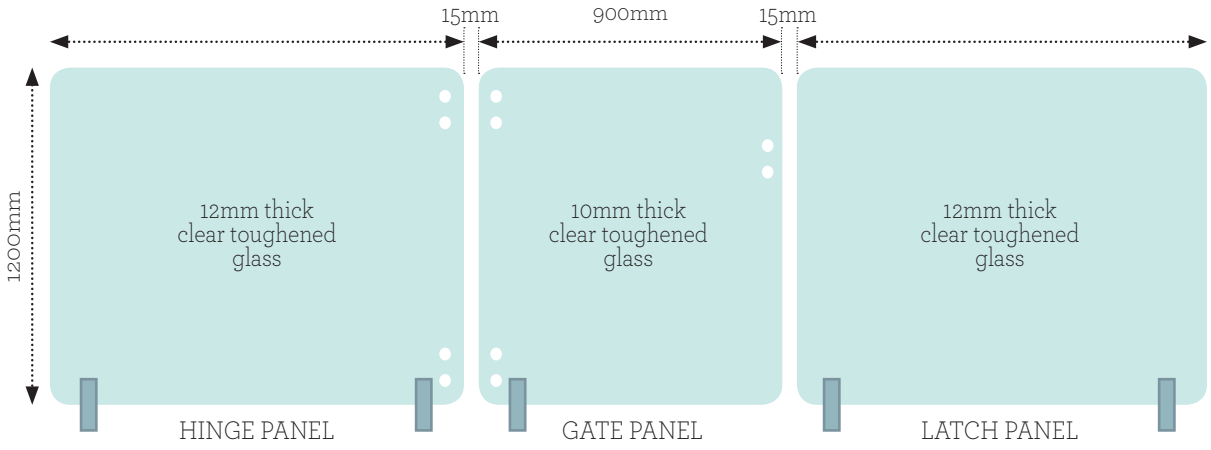

GLASS-TO-GLASS HINGES & WALL/POST GATE LATCH

- Hinge panel available widths: 500/900/1300/1450/1600mm

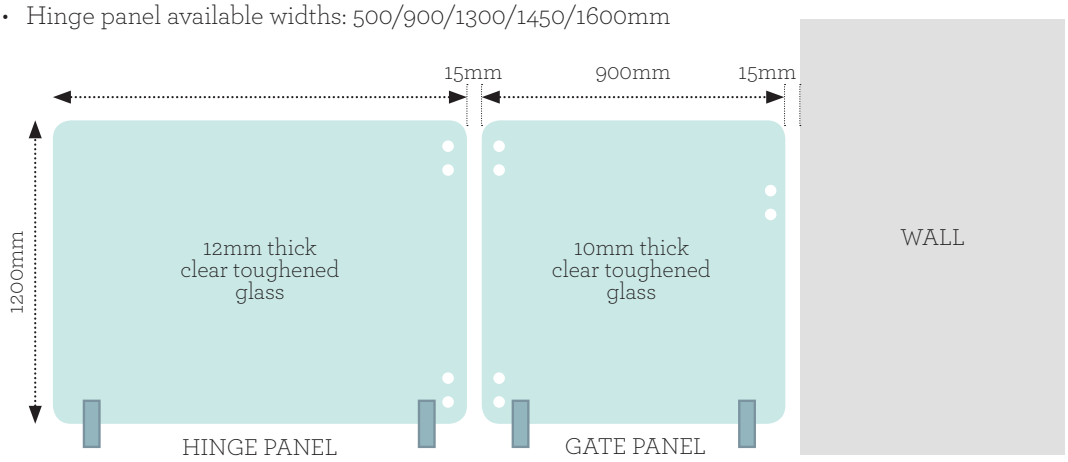

WALL/SQUARE POST GLASS HINGES & GLASS-TO-GLASS LATCH

- Use a friction latch. Any size panel can be used as a latch panel

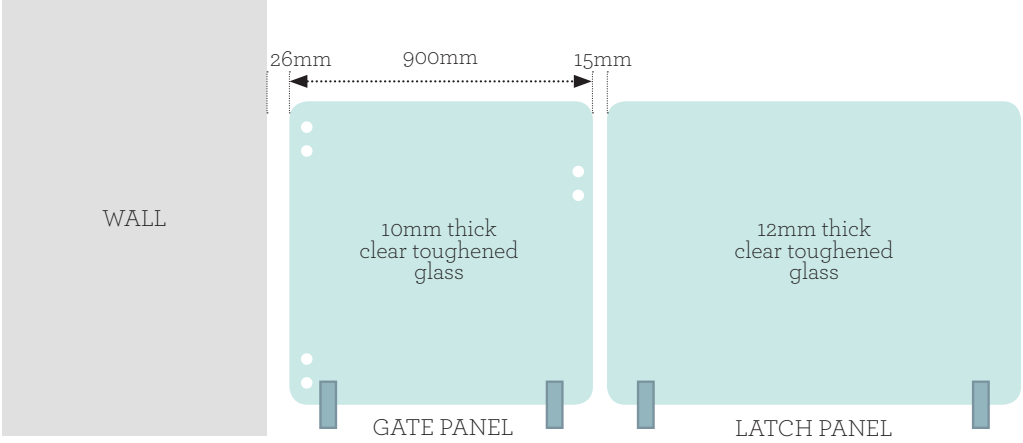

BelAire® DESIGNER FENCING

FRAMELESS GLASS FENCING PANELS

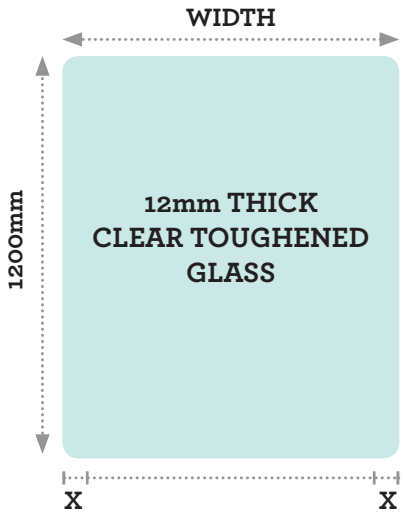

Order Code	Width	Height	Distance from Edge to Spigot (X)	Thickness	Sqm	Glass Weight KGS	Corner Radius
SCE0312PP	300mm	1200mm	75mm	12mm	0.36	11kg	2mm
SCE0412PP	400mm	1200mm	75mm	12mm	0.48	14kg	2mm
SCE0512PP	500mm	1200mm	100mm	12mm	0.60	18kg	2mm
SCE0612PP	600mm	1200mm	100mm	12mm	0.72	22kg	2mm
SCE0712PP	700mm	1200mm	100mm	12mm	0.84	25kg	2mm
SCE0812PP	800mm	1200mm	150mm	12mm	0.96	29kg	2mm
SCE0912PP	900mm	1200mm	150mm	12mm	1.08	32kg	2mm
SCE1012PP	1000mm	1200mm	150mm	12mm	1.20	36kg	2mm
SCE10512PP	1050mm	1200mm	200mm	12mm	1.26	37kg	2mm
SCE1112PP	1100mm	1200mm	200mm	12mm	1.32	38kg	2mm
SCE11512PP	1150mm	1200mm	200mm	12mm	1.38	41kg	2mm
SCE1212PP	1200mm	1200mm	200mm	12mm	1.44	43kg	2mm
SCE12512PP	1250mm	1200mm	200mm	12mm	1.50	45kg	2mm
SCE1312PP	1300mm	1200mm	200mm	12mm	1.56	47kg	2mm
SCE13512PP	1350mm	1200mm	200mm	12mm	1.62	49kg	2mm
SCE1412PP	1400mm	1200mm	250mm	12mm	1.68	50kg	2mm
SCE14512PP	1450mm	1200mm	250mm	12mm	1.74	53kg	2mm
SCE1512PP	1500mm	1200mm	250mm	12mm	1.80	54kg	2mm
SCE15512PP	1550mm	1200mm	250mm	12mm	1.86	56kg	2mm
SCE1612PP	1600mm	1200mm	250mm	12mm	1.92	58kg	2mm

BelAire® DESIGNER FENCING

FRAMELESS GLASS BALUSTRADE PANELS

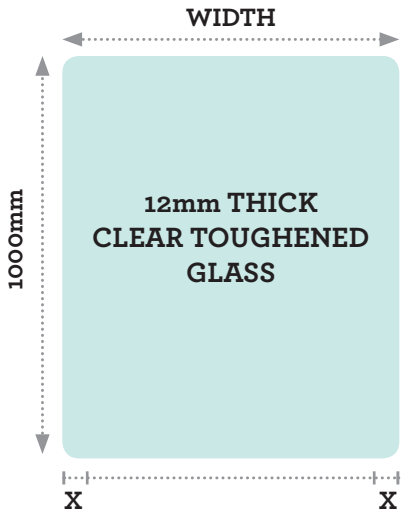

Order Code	Width	Height	Distance from Edge to Spigot (X)	Thickness	Sqm	Glass Weight KGS	Corner Radius
SCE0610BP	600mm	1000mm	100mm	12mm	0.60	18kg	2mm
SCE0710BP	700mm	1000mm	100mm	12mm	0.70	21kg	2mm
SCE0810BP	800mm	1000mm	150mm	12mm	0.80	24kg	2mm
SCE08510BP	850mm	1000mm	150mm	12mm	0.85	25.5kg	2mm
SCE0910BP	900mm	1000mm	150mm	12mm	0.90	27kg	2mm
SCE09150BP	950mm	1000mm	150mm	12mm	0.95	28.5kg	2mm
SCE1010BP	1000mm	1000mm	150mm	12mm	1.00	30kg	2mm
SCE10510BP	1050mm	1000mm	200mm	12mm	1.05	33kg	2mm
SCE1110BP	1100mm	1000mm	200mm	12mm	1.10	36kg	2mm
SCE11510BP	1150mm	1000mm	200mm	12mm	1.15	39kg	2mm
SCE1210BP	1200mm	1000mm	200mm	12mm	1.2	42kg	2mm
SCE12510BP	1250mm	1000mm	200mm	12mm	1.25	27kg	2mm
SCE1310BP	1300mm	1000mm	200mm	12mm	1.3	30kg	2mm
SCE13510BP	1350mm	1000mm	200mm	12mm	1.35	33kg	2mm
SCE1410BP	1400mm	1000mm	250mm	12mm	1.4	36kg	2mm

BelAire® DESIGNER FENCING

FRAMELESS GLASS GATE & HINGE PANELS

BELAIRE GATE PANELS

- 8 & 10mm thick clear toughened glass
- Corner radius: 2mm
- 6 x 12mm diameter holes
- 10mm supplied as standard

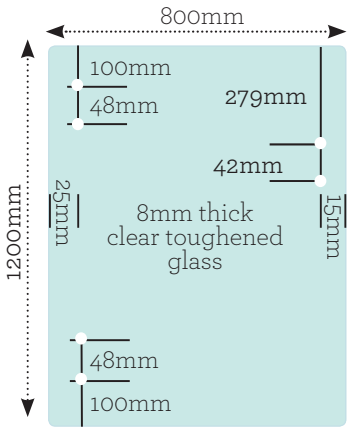

Order Code: SCE0812GP
Glass weight: 19.9kg

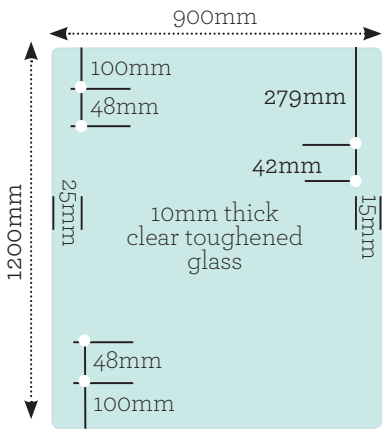

Order Code: SCE0912GP
Glass weight: 28kg

BELAIRE HINGE PANELS

- 12mm thick clear toughened glass
- Corner radius: 2mm
- 4 x 12mm diameter holes

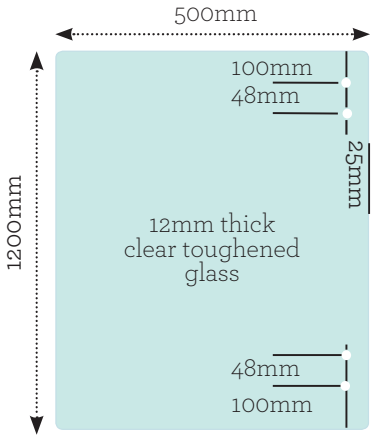

Order Code: SCE0512HP
Glass weight: 18kg

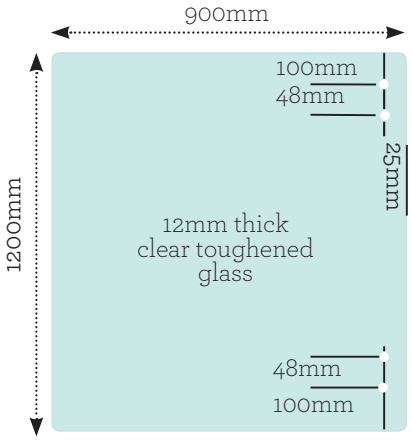

Order Code: SCE0912HP
Glass weight: 32kg

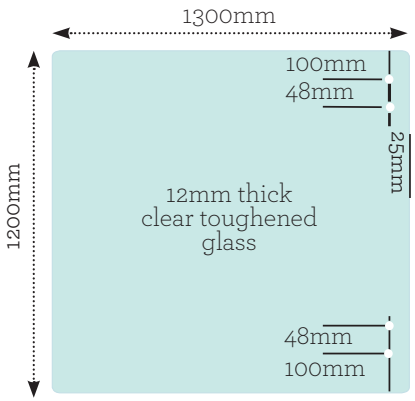

Order Code: SCE1312HP
Glass weight: 47kg

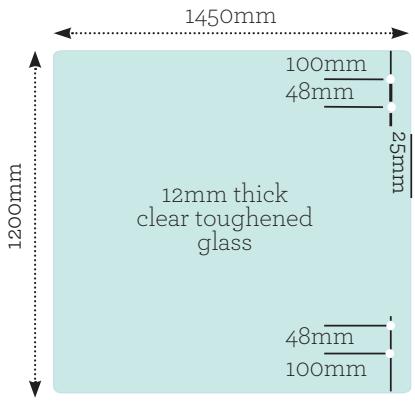

Order Code: SCE14512HP
Glass weight: 52.2kg

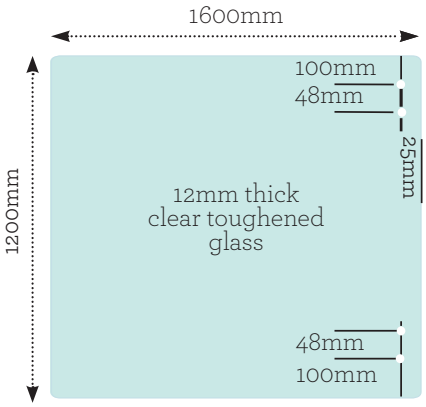

Order Code: SCE1612HP
Glass weight: 58kg

BelAire® DESIGNER FENCING

DECK LAYOUTS

SQUARE BASE PLATE SPIGOT (TEKAPO)

External deck measurements need a minimum of 60mm + 25mm (total of 85mm) taken off each corner of the deck to get the correct dimensions to work out the glass panels.

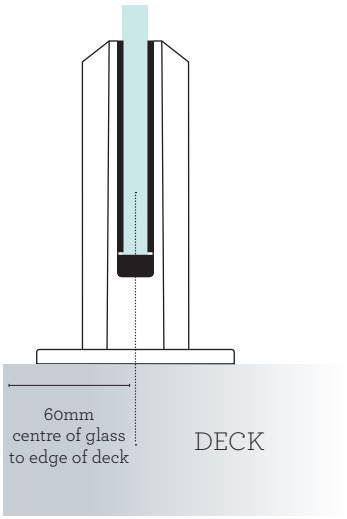

DOMICAL BASE PLATE SPIGOT (MILFORD)

External deck measurements need a minimum of 75mm + 25mm (total of 100mm) taken off each corner of the deck to get the correct dimensions to work out the glass panels.

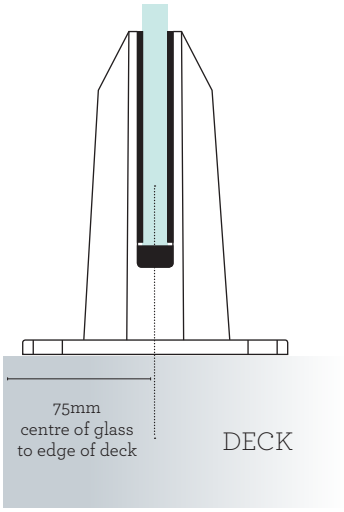

SIDE MOUNT SPIGOT (KAWEKA)

The glass sits flush with the outside of the deck, so use the dimensions of the deck to work out the glass panels.

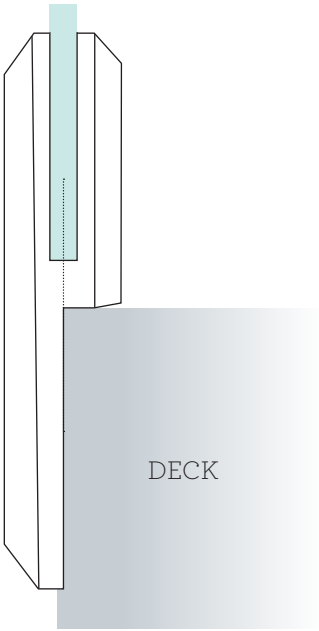

SIDE MOUNT SPIGOT (AORAKI)

External deck measurements need 30mm added to each corner of the deck to get the correct dimensions to work out the glass panels.

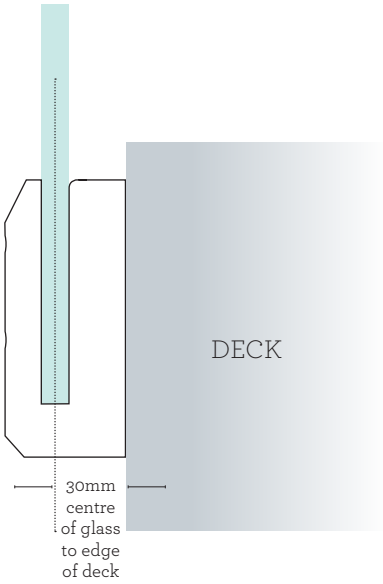

BelAire® DESIGNER FENCING

FRICTION SPIGOT RANGE

- Contemporary share shape with minimal visible fixings
- Slim profile with tapered top to comply with "no foot hold" requirements
- Recessed friction plate for neat finish
- Base plate spigots have countersunk holes to enable flush fitting
- Made from either:
  Duplex 2205 stainless steel – a superior duplex stainless steel, featuring elevated levels of chemical compounds that enable superior strength and corrosion/pitting resistance. Commonly used in harsh marine environments, or
  Anodised Aluminium – anodised for a hard surface finish that is long lasting and easy to maintain. Issues such as 'tea staining' are avoided.

TEKAPO CORE DRILL SPIGOT

Polish finish Duplex 2205 Stainless Steel

CORE DRILL Spigot - FRICTION FIT
Polish Finish
Order Code: SCECDS

DRESS RING
Polish Finish
(Comes with the core drill spigot)

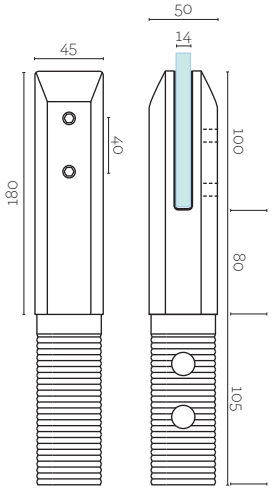

TEKAPO BASE PLATE SPIGOT

Polish finish Duplex 2205 Stainless Steel

BASE PLATED Spigot - FRICTION FIT
Polish Finish
Order Code: SCEPSSP

SLIMLINE DOMICAL COVER
Polish Finish
(Comes with base plated spigot)

DRESS RING

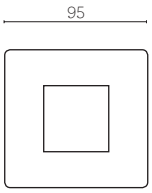

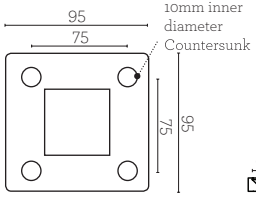

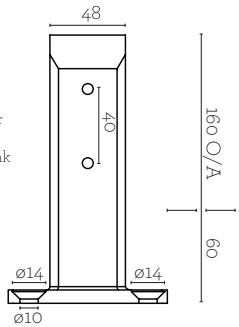

BelAire® DESIGNER FENCING

MILFORD BASE PLATE SPIGOT

Polish finish Duplex 2205 Stainless Steel

BASE PLATE Spigot - FRICTION FIT
Polish Finish
Order Code: SCEPSOP

DOMICAL COVER
Polish or Satin Finish
(Comes with the base plated spigot)

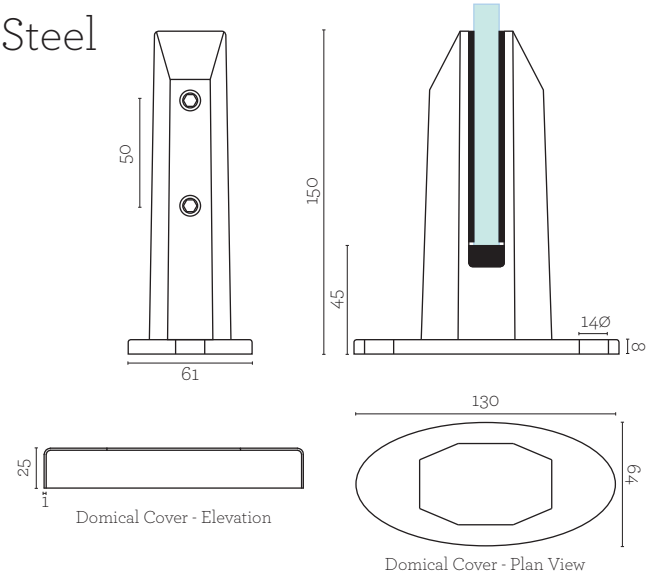

CARDONA BASE PLATE SPIGOT

Brushed Anodised Aluminium finish

BASE PLATE Spigot - FRICTION FIT
Satin Finish
Order Code: SCEAAP

DRESS RING - Cover Plate
Satin Finish
(Comes with base plated spigot)

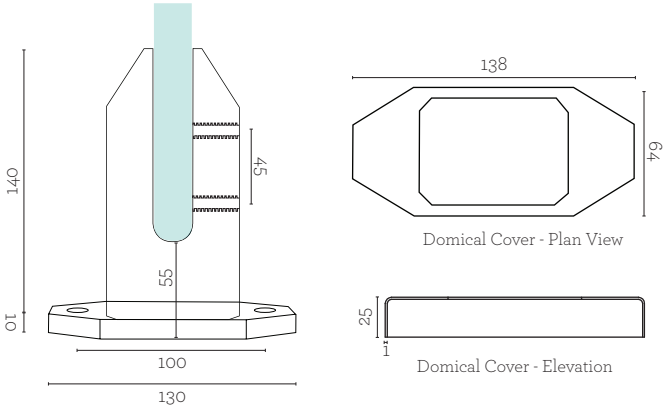

KAWEKA SIDE MOUNT SPIGOT

Polish finish Duplex 2205 Stainless Steel

Side Mount Bracket - FRICTION
Polish Finish
Order Code: SCESMS

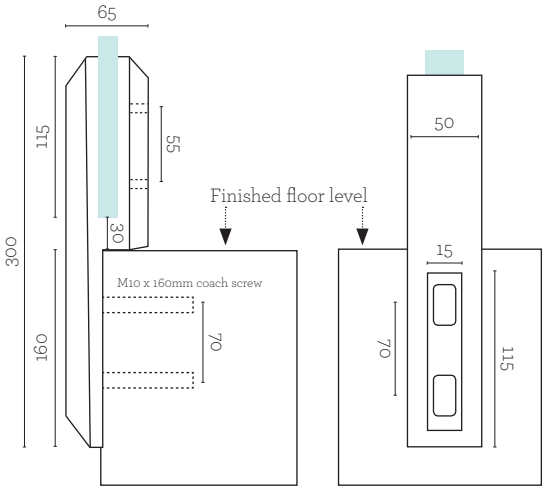

BelAire® DESIGNER FENCING

AORAKI SIDE MOUNT SPIGOT

Polish finish Duplex 2205 Stainless Steel

FACE MOUNTED Spigot - FRICTION FIT
Polish Finish
Order Code: SCEFMS

SIDE MOUNT ADVANTAGES

- Made from stainless steel 2205
- Convenient alternative to standoffs
- Friction fitting side mount clamp
- Square shape with minimal visible fixings
- No holes in glass required
- Suits 12mm glass
- Quick and easy install

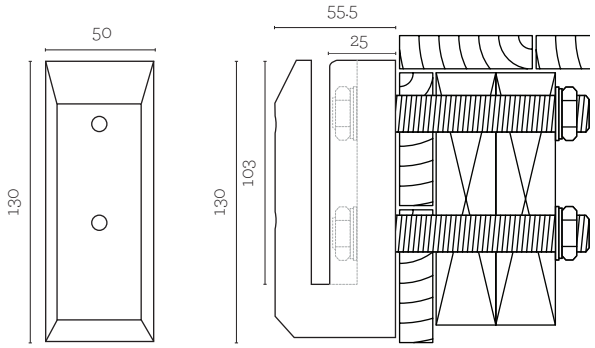

50mm DIA x 30mm BODY STANDOFF

Stainless Steel 316

Fixing rods
sold separately

Polish Finish
Order Code: SCE05030

SPECIFICATION

- Stainless Steel 316
- Heavy duty 12mm threaded (M12) screw
- Threaded through entire body - allows screw flexibility in installation
- Full solid bar 316 stainless steel - super strong
- Additional washers available to pack out body from wall
- Engineered for 12mm thick glass
- Standoff kit includes cap, body, short stud, 2 x plastic washers & 1 x plastic bush (fixing rods sold separately)

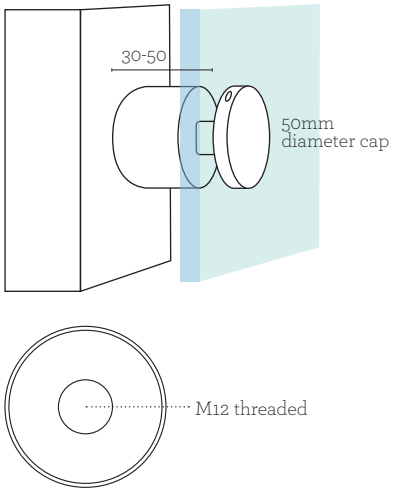

FIXING RODS

160mm Lag Screw
Order Code: SCELS160

- Heavy duty SS316; M 12; with 12mm coach screw;
- Allows installation into timber or composite material
- Hex drive allen head allows fast and simple installation

120mm Threaded Rod
Order Code: SCETHR12

- Heavy duty SS316; M12

STANDOFF TOOL

Powdercoated black

SPECIFICATION

- Tighten or loosen 50mm diameter standoffs

BelAire® DESIGNER FENCING

FIXINGS FOR ALL SPIGOTS

Timber Fixings:

Countersunk Timber Screw 120mm Long

Stainless Steel 316 (Torx head drive)
Order Code: SCETCSK

- Self tapping 120mm length with M8 diameter screw
- Ideal for fixing base plated spigots onto a timber deck

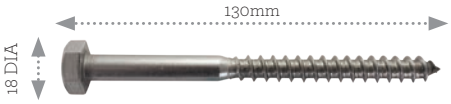

Coachscrew Timber Screw 130mm Long

Stainless Steel 316 (Hex head drive)
Order Code: SCETHX

- Self tapping 130mm length with M10 diameter screw
- Ideal for fixing base plated spigots onto a timber deck

Concrete Fixings:

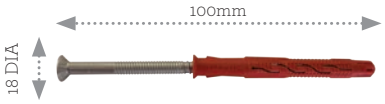

Countersunk Sleeve Concrete Screw 100mm Long

Stainless Steel 316 (Torx head drive)
Order Code: SCECCSK

- Self tapping 100mm length with 10mm outer; M8 diameter screw
- Ideal for fixing base plated spigots onto a timber deck
- Flexible embedment depth (approved at 50mm and 70mm)
- Pre-assembled for optimum handling and fastening quality

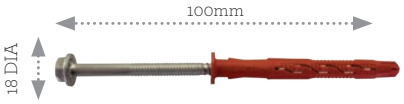

Collard Concrete Anchor 100mm Long

Stainless Steel 316 (Hex head drive)
Order Code: SCECHX

- Self tapping 130mm length with 10mm outer; M8 diameter screw
- Ideal for fixing base plated spigots onto a timber deck flexible embedment depth (approved at 50mm and 70mm)
- Pre-assembled for optimum handling and fastening quality

Also other items such as Chemset and threaded rod available on request.

GATE HARDWARE: LATCHES & HINGES

GLASS-TO-GLASS LATCH KIT
Polish finish Duplex 2205 Stainless Steel

Order Code: SCEHPGL

SPECIFICATION

- Full stainless steel side pull latch; Duplex 2205 stainless steel
- Friction latch for glass to glass 180 degree application
- Suits 8mm and 10mm glass gates
- Latch panel must be 12mm thick - No latch holes required
- Available in polish finish only

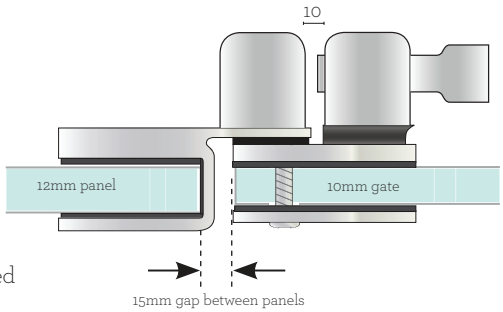

GLASS-TO-WALL/SQUARE POST LATCH KIT
Polish finish Duplex 2205 Stainless Steel

Order Code: SCEHPGWL

SPECIFICATION

- Full stainless steel side pull latch; 2205 stainless steel
- Suitable for application to wall or square posts
- Suits 8mm and 10mm glass gates
- Available in polish finish only

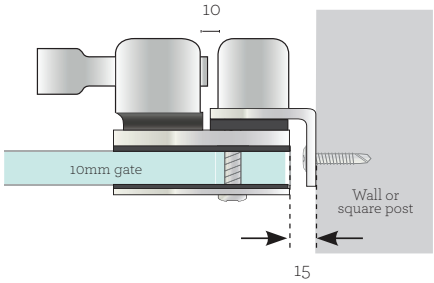

GLASS-TO-GLASS LATCH KIT
316 Stainless Steel & Polymer

Order Code: SCEGL

SPECIFICATION

- Side pull latch
- FRICTION LATCH for glass to glass 180 degree application
- Stainless steel backing plates + D&D side pull polymer latch
- Suits 8mm and 10mm glass gate
- Latch panel must be 12mm thick – no latch holes required
- Available in polish finish backing plates

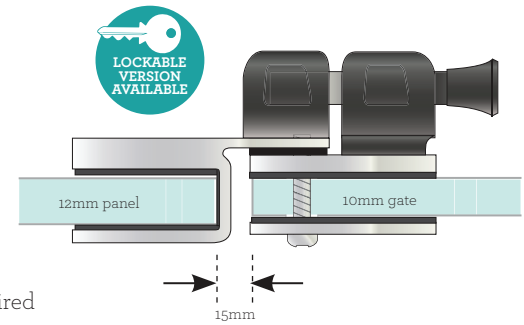

BelAire® DESIGNER FENCING

GLASS-TO-GLASS 90° LATCH KIT (external fit)

316 Stainless Steel & Polymer

Order Code: SCEGL90EX

SPECIFICATION

- side pull latch glass gate to 90 degree latch panel external fit
- Stainless steel backing plates + D&D side pull polymer latch
- Suits 8mm and 10mm glass gates
- Latch panel must be 12mm thick - no latch holes required

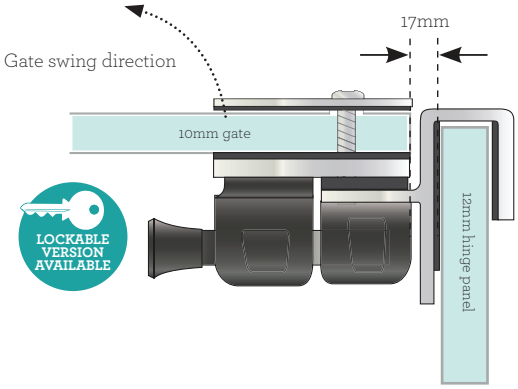

GLASS-TO-GLASS 90° LATCH KIT (internal fit)

316 Stainless Steel & Polymer

Order Code: SCEGL90IN

SPECIFICATION

- Side pull latch
- Glass gate to wall/ square post application
- Stainless steel backing plates + D&D side pull polymer latch
- Suits 8mm and 10mm glass glass gates
- Available in satin or polish finish backing plate
- Suits 'internal 90 degree' configuration

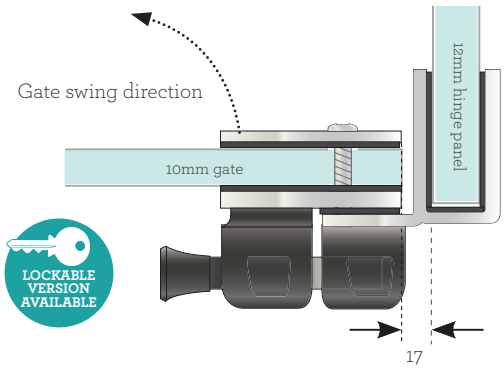

GLASS-TO-WALL/SQUARE POST LATCH KIT

316 Stainless Steel & Polymer

Order Code: SCEGWL

SPECIFICATION

- Side pull latch glass gate to 90 degree latch panel internal fit pull polymer latch
- Stainless steel backing plates + D&D side
- Suits 8mm and 10mm glass glass gates
- Latch panel must be 12mm thick - no latch holes required
- Available in polish finish backing plate

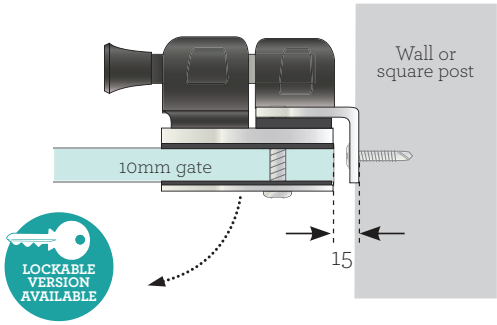

BelAire® DESIGNER FENCING

HYDRAULIC SOFT CLOSING GLASS-TO-GLASS HINGE

Polish finish Duplex 2205

RECOMMENDED UPGRADE

Order Code: **SCEHYGG**

SPECIFICATION

- Only genuine Hydraulic Soft Closing hinge
- No more slamming glass doors
- Also available in Glass-to-Wall

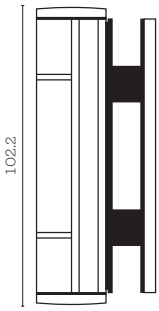

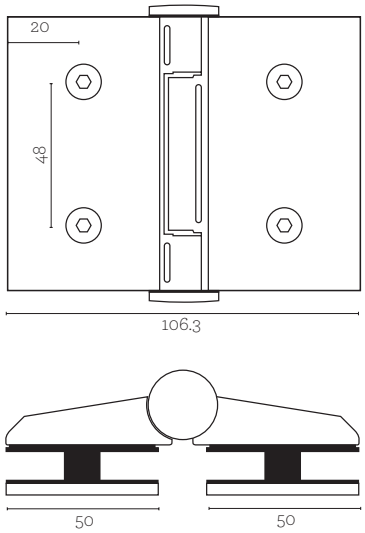

GLASS-TO-GLASS HINGES (set of 2)

Polish finish Duplex 2205 Stainless Steel

Order Code: SCEHPHS

SPECIFICATION

- Glass gate to glass hinge panel
- Stainless steel Duplex 2205
- Suits 8 and 10mm glass gates
- Available in polish finish
- Cone cap incorporated to prevent 'toe hold'
- Includes solid stainless 2205 backing plates for a premium finish

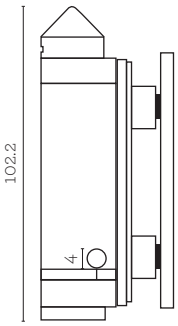

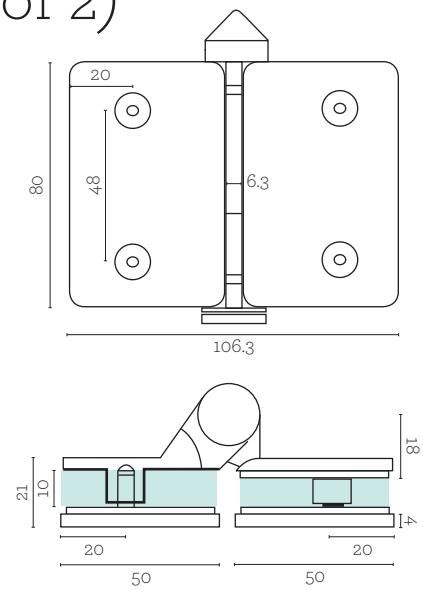

FACE MOUNT HINGES (set of 2)

Polish finish 316 Stainless Steel

Order Code: SCEHS

SPECIFICATION

- Glass gate to glass hinge panel
- For hinging off the front face of a wall/ existing structure
- Or hinging from standard glass gate to glass hinge panel.
- Suits 8 & 10mm glass gates
- Stainless steel 316
- Available in polish finish
- Cone cap incorporated to prevent 'toe hold'

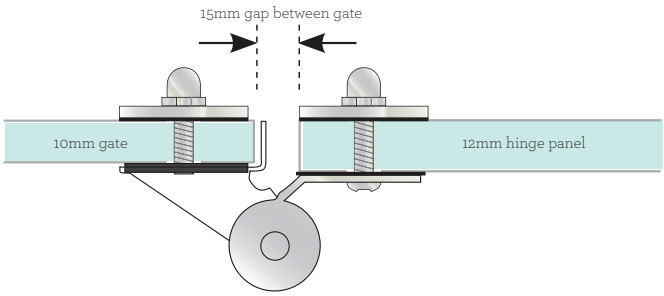

BelAire® DESIGNER FENCING

HYDRAULIC GLASS-TO-WALL HINGE
Polish finish

Order Code: SCEHYGW

SPECIFICATION

- Attaches left or right
- Duplex 2205
- Only genuine Hydraulic Glass-toWall Hinge

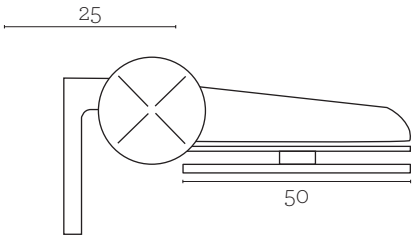

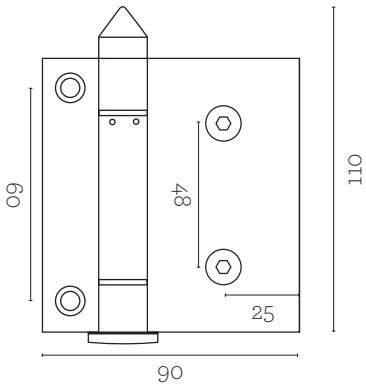

GLASS-TO-WALL/SQ. POST HINGES (set of 2)
Polish finish Duplex 2205 Stainless Steel

Order Code: SCEHPGWHS

SPECIFICATION

- Glass gate to wall or square post application
- Suits 8 and 10mm glass gates
- Stainless steel Duplex 2205
- Available in polish or satin finish
- Cone cap incorporated to prevent 'toe hold'

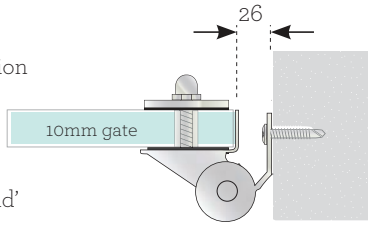

GLASS-TO-WALL/SQ. POST HINGES (set of 2)
Polish finish 316 Stainless Steel

Order Code: SCEGWHS

SPECIFICATION

- Glass gate to wall or squa e post application
- Suits 8 and 10mm glass gate
- Stainless steel 316
- Available in polish Finish
- Cone cap incorporated to prevent 'toe hold'

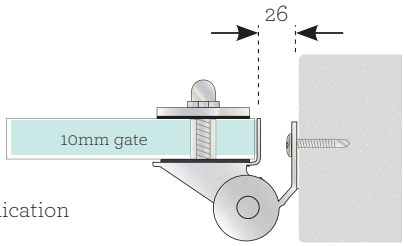

BelAire® DESIGNER FENCING

CLAMPS & HANDRAILS

- Contemporary rigidity brackets that are "friction fit" – the glass panels do not require pre-drilled holes.
- All are suitable for 12mm glass.

SMALL RIGI CLAMP

Polish finish 316 Stainless Steel

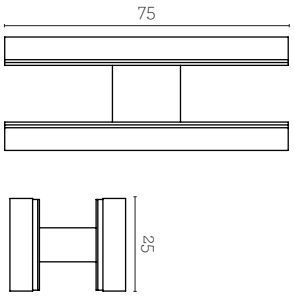

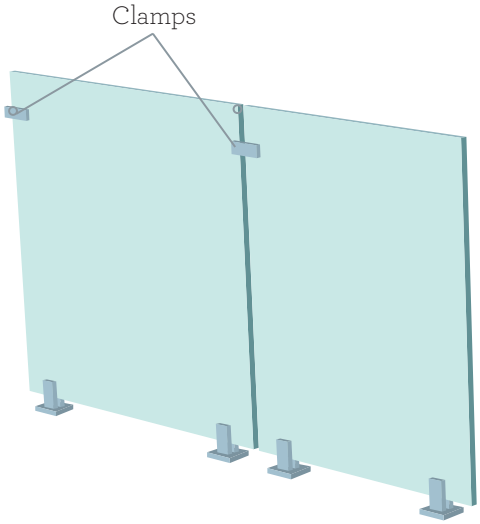

Order Code: SCEGGS

- Tightens with an allen key

LARGE RIGI CLAMP

Polish finish 316 Stainless Steel

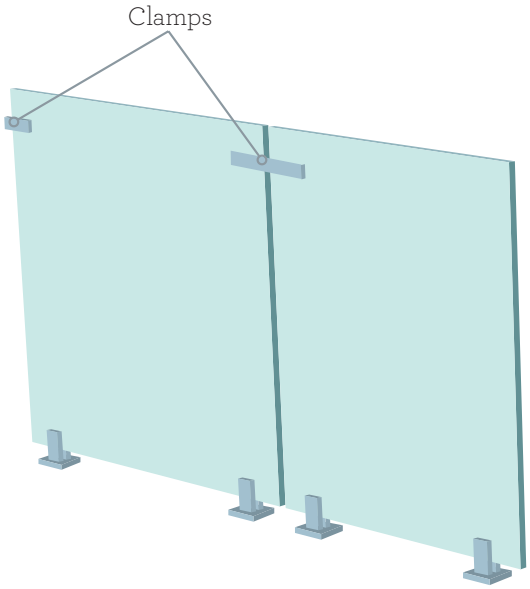

Order Code: SCEGGL

- Tightens with an allen key

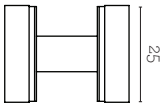

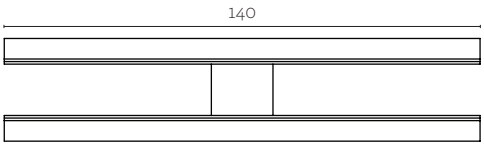

BelAire® DESIGNER FENCING

90° RIGI CLAMP

316 Stainless Steel

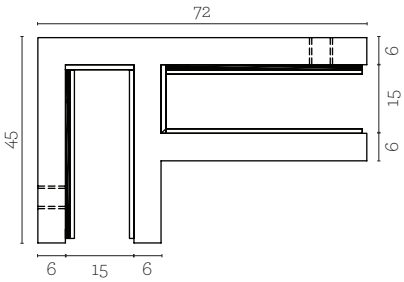

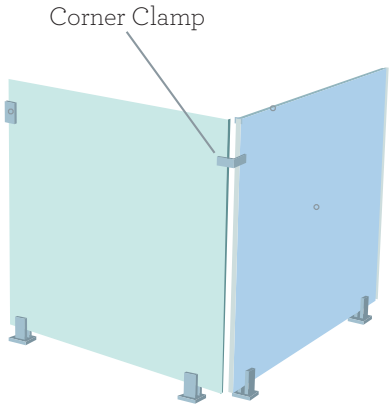

Polish Finish

Order Code: SCEGG90

90° HEAVY DUTY CORNER CLAMP

316 Stainless Steel

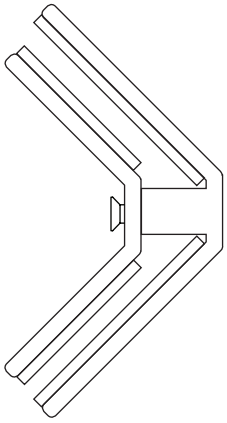

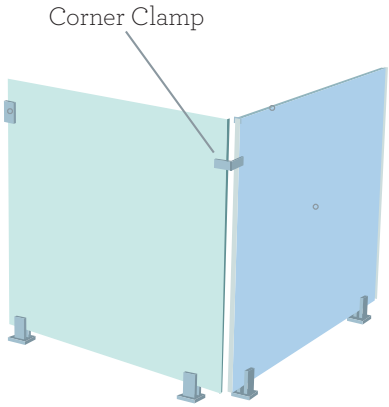

Polish Finish

Order Code: SCEGG90HD

WALL RIGI CLAMP

316 Stainless Steel

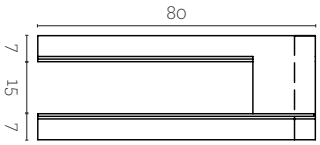

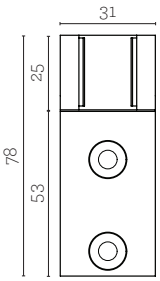

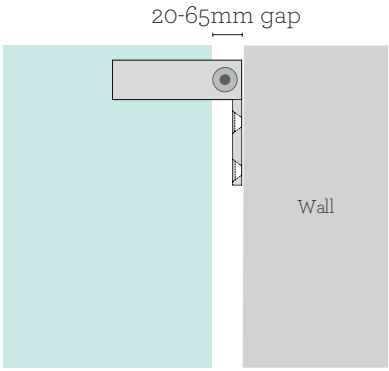

Polish Finish

Order Code: SCEGW

- Adjustable with allen key
- Counter sunk screw holes

BelAire® DESIGNER FENCING

HEAVY DUTY WALL CLAMP

316 Stainless Steel

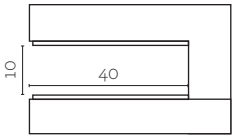

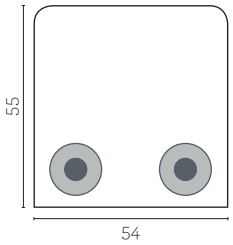

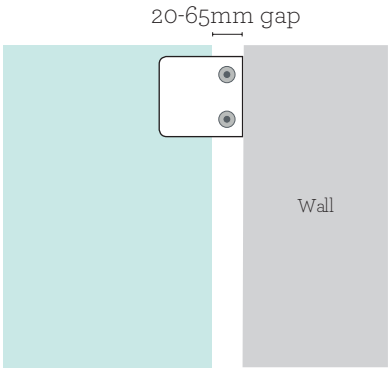

Polish Finish

Order Code: SCEGWHD

- Adjustable with allen key
- Counter sunk screw holes

SWIVEL RIGI CLAMP

316 Stainless Steel

VARIABLE ANGLE

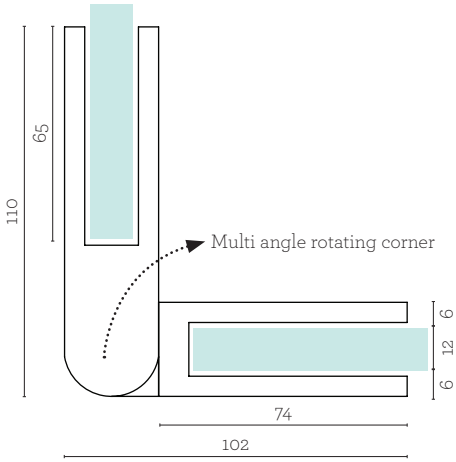

Polish Finish

Order Code: SCEGGSW

HANDRAIL – 5800mm x 25mm x 21mm

316 Stainless Steel

SLIMLINE RAIL

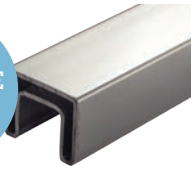

COMPLIANT WITH NZS4223:2016

Order Code: SCEHR5.8 (polish finish)

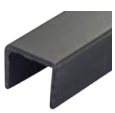

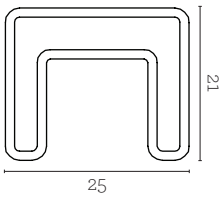

SPECIFICATION

- Slimline stylish profile - caps over 12mm thick glass
- 1.2mm wall thickness
- 14 x14mm glazing pocket: silicone onto glass or use in conjunction with glazing rubber
- To be compliant with NZS4223:2016 - Approved Balistrade Handrail

BelAire® DESIGNER FENCING

180° CONNECTOR – 25mm x 21mm

316 Stainless Steel

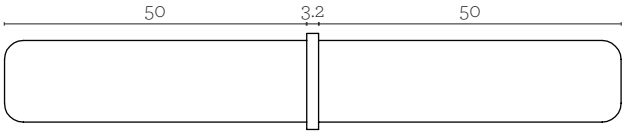

Order Code: SCEHR180 (polish finish)

SPECIFICATION

- In-line rail joiner
- Easy to use tap-in fitting: allows for increased speed of assembly
- Stainless Steel 316; High Polish finish
- Friction fitting or epoxy can be used

90° CONNECTOR – 25mm x 21mm

316 Stainless Steel

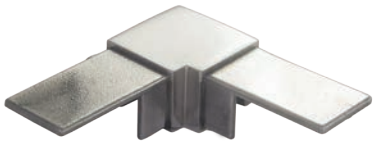

Code: SCEHR90 (polish finish)

SPECIFICATION

- 90 degree corner joiner ; easy to use tap-in fitting
- Stainless Steel 316; High Polish finish
- Epoxy glue, weld or drill/tap tube for joining strength

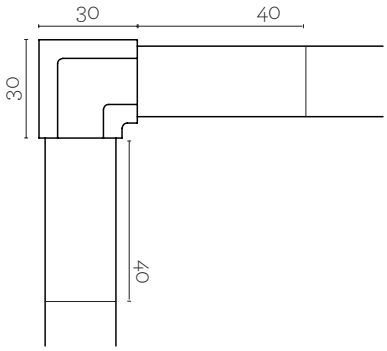

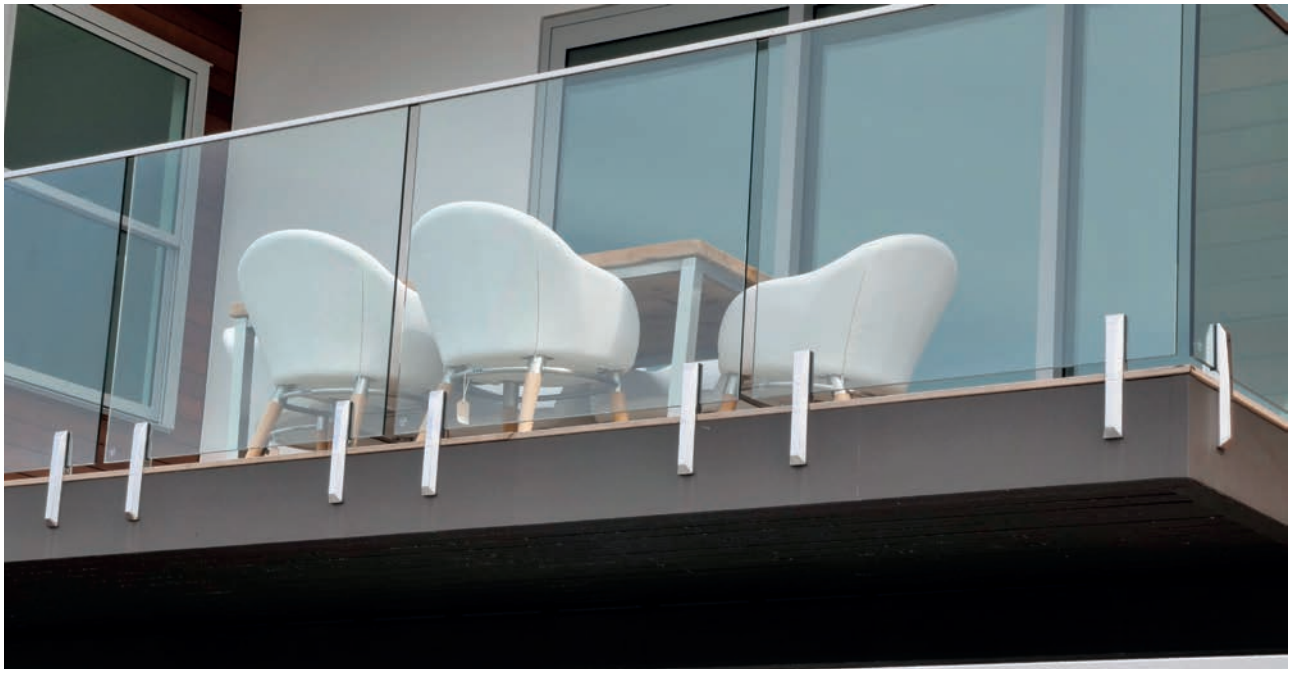

BelAire® DESIGNER FENCING

SWIVEL HORIZONTAL CONNECTOR

316 Stainless Steel

Order Code: SCEHRH

SPECIFICATION

- Variable angle horizontal joiner
- From straight rail, achieve up to 45 degrees left or right angle joining
- Epoxy glue, weld or dril/top tube for joining strength

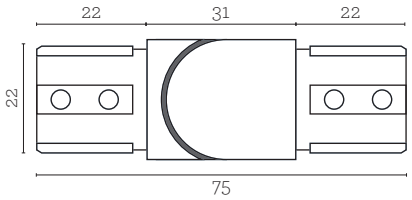

SWIVEL VERTICAL CONNECTOR

316 Stainless Steel

Order Code: SCEHRV

SPECIFICATION

- Variable angle vertical joiner
- From straight rail, achieve up to 45 degrees upwards & downwards
- Ideal for staircase installation

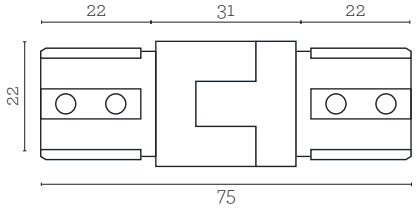

END CAP – 25mm x 21mm

316 Stainless Steel

Order Code: SCEHREC

SPECIFICATION

- End cap; easy to use tap-in fitting
- Stainless Steel 316; high polish finish
- Epoxy glue, weld or drill/tap tube for joining strength

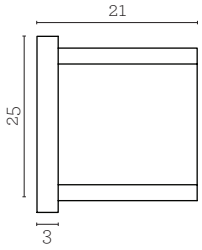

WALL PLATE – 25mm x 21mm

316 Stainless Steel

Order Code: SECHRWC

SPECIFICATION

- Bracket can be affixed to wall/post
- 25 x 21mm tube fits into opening (female fit)
- Stainless Steel 316; high polish finish
- Epoxy glue, weld or drill/tap tube for joining strength

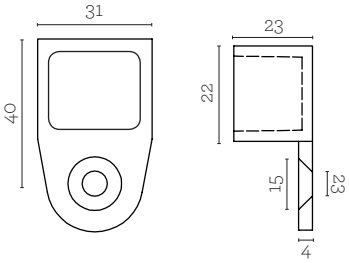

BelAire® DESIGNER FENCING